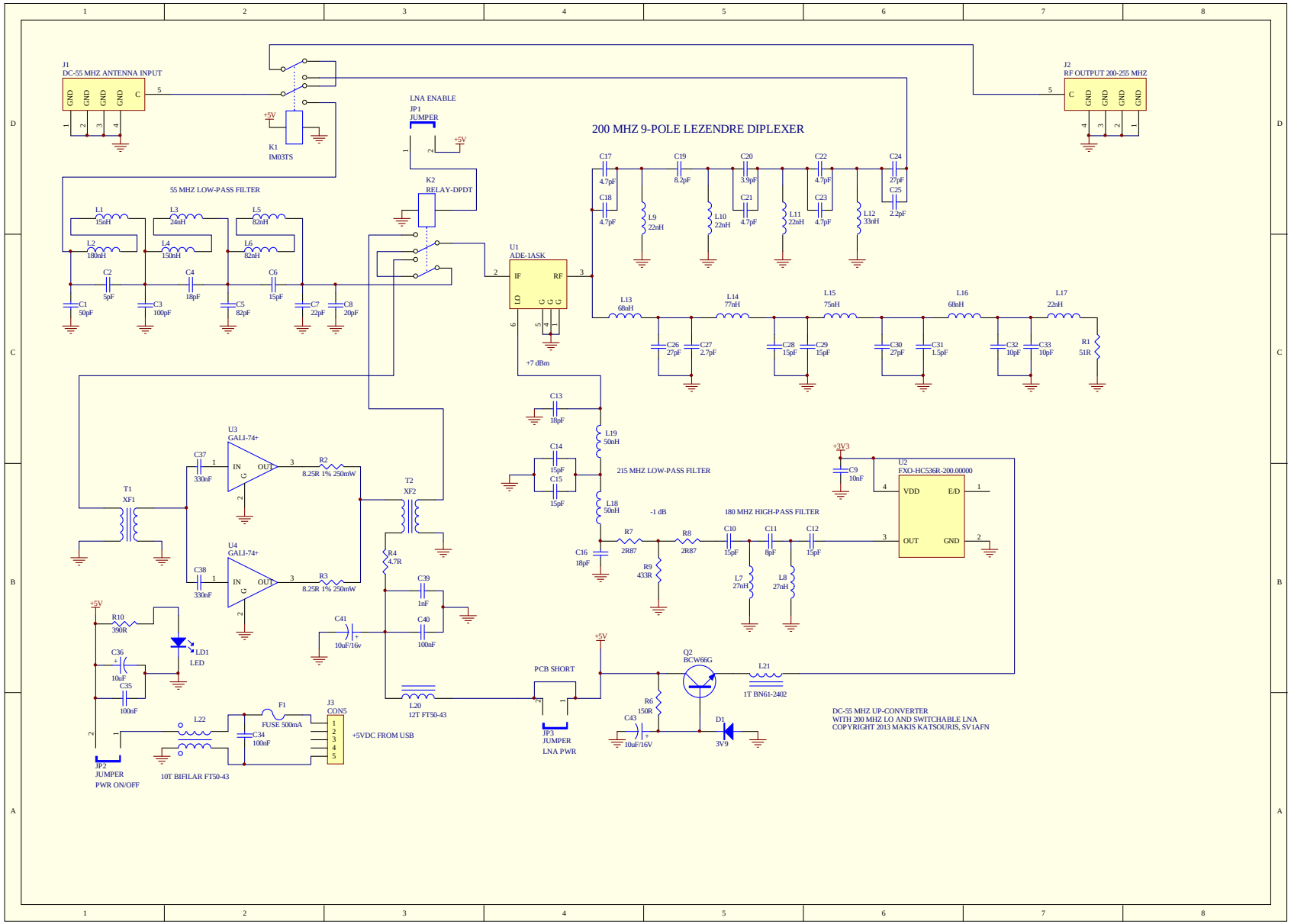
200 MHZ 9-POLE LEZENDRE DIPLEXER
J1
DC-55 MHZ ANTENNA INPUT
GND GND GND GND C
J2
RF OUTPUT 200-255 MHZ
C GND GND GND GND
K1
IM03TS
+5V
LNA ENABLE
JP1
JUMPER
K2
RELAY-DPDT
55 MHZ LOW-PASS FILTER
L1 15nH
L2 180nH
L3 24nH
L4 150nH
L5 82nH
L6 82nH
C1 50pF
C2 5pF
C3 100pF
C4 18pF
C5 82pF
C6 15pF
C7 22pF
C8 20pF
U1
ADE-1ASK
IF RF LO G G G
+7 dBm
C17 4.7pF
C18 4.7pF
L9 22nH
C19 8.2pF
L10 22nH
C20 3.9pF
C21 4.7pF
L11 22nH
C22 4.7pF
C23 4.7pF
L12 33nH
C24 27pF
C25 2.2pF
L13 68nH
C26 27pF
C27 2.7pF
L14 77nH
C28 15pF
C29 15pF
L15 75nH
C30 27pF
C31 1.5pF
L16 68nH
C32 10pF
C33 10pF
L17 22nH
R1 51R
C13 18pF
L19 50nH
C14 15pF
C15 15pF
215 MHZ LOW-PASS FILTER
L18 50nH
C16 18pF
-1 dB
R7 2R87
R8 2R87
R9 433R
180 MHZ HIGH-PASS FILTER
C10 15pF
C11 8pF
C12 15pF
L7 27nH
L8 27nH
+3V3
C9 10nF
U2
FXO-HC536R-200.00000
VDD E/D OUT GND
U3
GALI-74+
IN OUT G
C37 330nF
R2 8.25R 1% 250mW
U4
GALI-74+
C38 330nF
R3 8.25R 1% 250mW
T1
XF1
T2
XF2
R4 4.7R
C39 1nF
C40 100nF
C41 10uF/16v
L20
12T FT50-43
PCB SHORT
JP3
JUMPER
LNA PWR
Q2
BCW66G
L21
1T BN61-2402
R6 150R
C43 10uF/16V
D1
3V9
R10 390R
LD1
LED
C36 10uF
C35 100nF
JP2
JUMPER
PWR ON/OFF
L22
10T BIFILAR FT50-43
F1
FUSE 500mA
C34 100nF
J3
CON5
+5VDC FROM USB
DC-55 MHZ UP-CONVERTER
WITH 200 MHZ LO AND SWITCHABLE LNA
COPYRIGHT 2013 MAKIS KATSOURIS, SV1AFN